DocuSign Envelope ID: 4BA3F50E-6EA4-4972-99DA-3834AA04620E

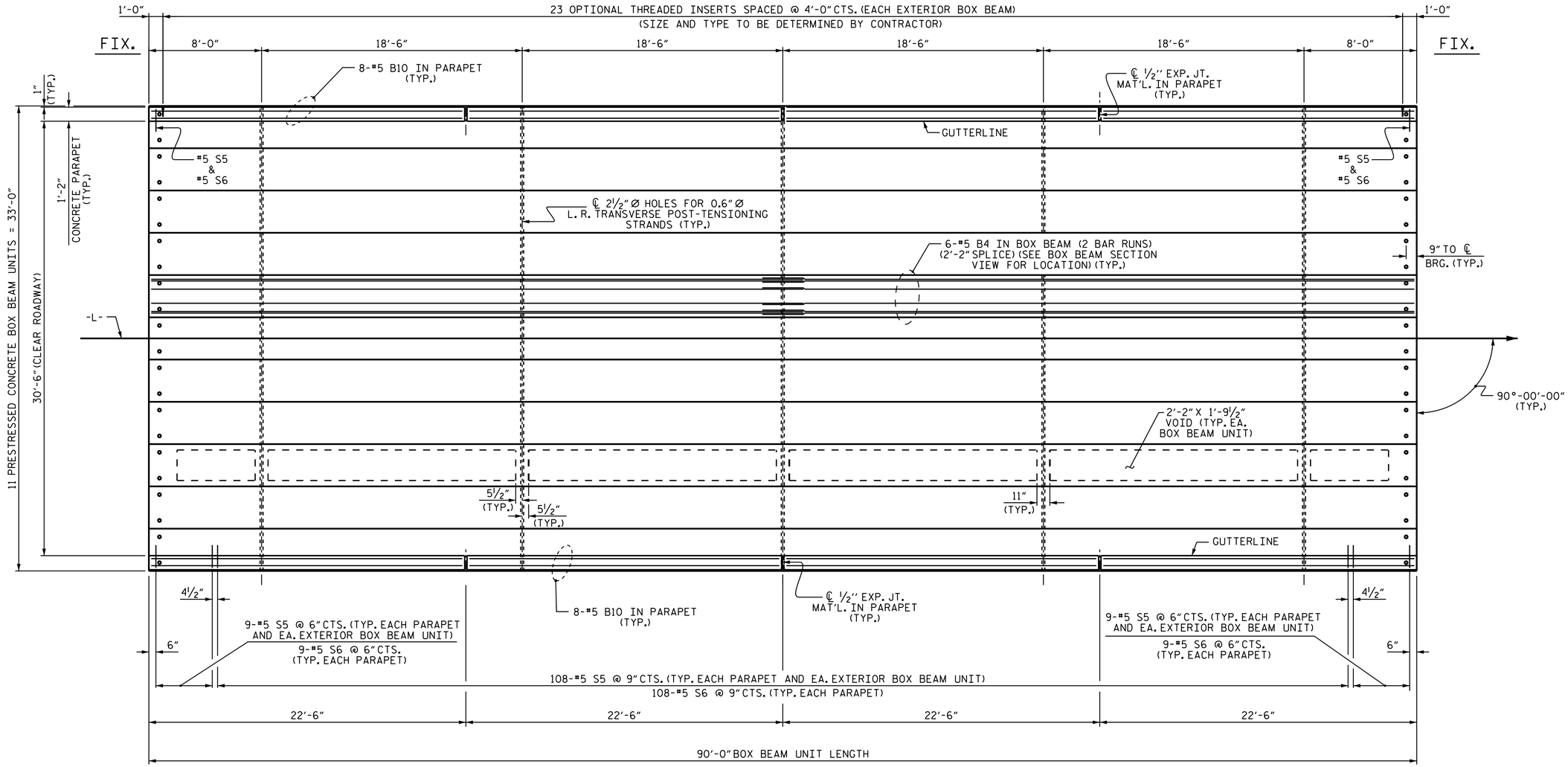

PLAN OF UNIT - SPAN B

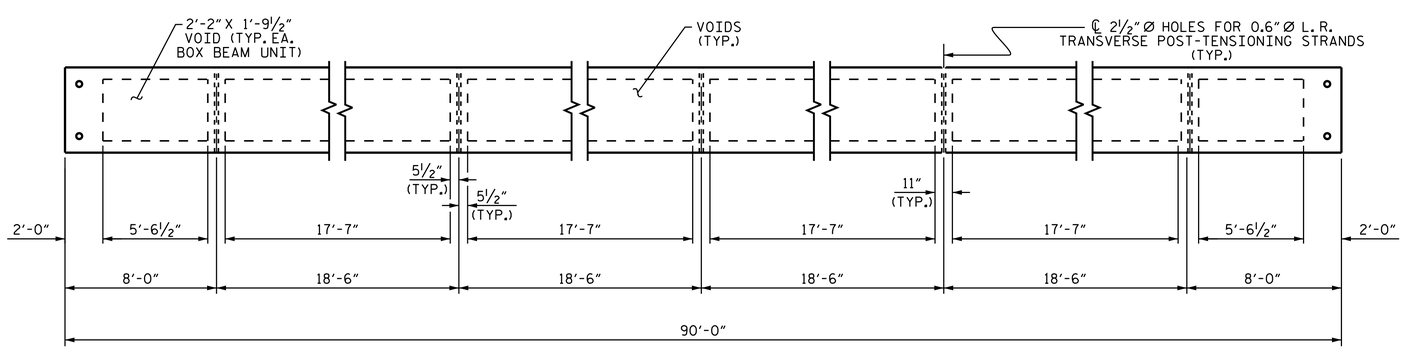

DIAPHRAGM AND VOID LAYOUT

PROJECT NO. 17BP.11.R.151

SURRY COUNTY

STATION: 19+09.00-L-

SHEET 2 OF 5

STATE OF NORTH CAROLINA
DEPARTMENT OF TRANSPORTATION
RALEIGH

PLAN OF 90' UNIT
30'-6" CLEAR ROADWAY
90° SKEW

SPAN B

6/11/2019

DOCUMENT NOT CONSIDERED FINAL UNLESS ALL SIGNATURES COMPLETED

TGS ENGINEERS
804-C N. LAFAYETTE ST
SHELBY, NC 28150
PH (704) 476-0003
CORP. LICENSE NO.: C-0275

REVISIONS						
NO.	BY:	DATE:	NO.	BY:	DATE:	
1			3			
2			4			

SHEET NO. S-11

TOTAL SHEETS 32

ASSEMBLED BY :	NMW	DATE :	1/19
CHECKED BY :	MGC	DATE :	2/19
DRAWN BY : DGE 8/10	REV. 8/14	MAA/TMG	
CHECKED BY : TMG 11/11			

STD.NO.33PCBB_33_90S_90L